APPENDIX I
SOUTHERN RELIEF ROAD SUPPLEMENTARY REPORT

TECHNICAL NOTE

MARKET HARBOROUGH TRANSPORT STUDY

SOUTHERN RELIEF ROAD APPRAISAL

IDENTIFICATION TABLE	
Client/Project owner	Leicestershire County Council
Project	Market Harborough Transport Study
Type of document	Technical Note
Date	11/04/2016
Reference number	103557
Number of pages	22

APPROVAL					
Version	**Name**		**Position**	**Date**	**Modifications**
1	Author	Dave Cope	Consultant	02/03/2016	
	Checked by	Swati Mittal	Senior Consultant	02/03/2016	
	Approved by	Duncan Irons	Project Director	02/03/2016	
2	Author	Dave Cope	Consultant	11/04/2016	Updated the report to incorporate comments and requested changes.
	Checked by	Duncan Irons	Project Director	11/04/2016	
	Approved by	Duncan Irons	Project Director	11/04/2016	

TABLE OF CONTENTS

1.	INTRODUCTION	4
1.1	BACKGROUND	4
1.2	STRUCTURE OF THE NOTE	4
2.	SCHEME DETAILS	5
2.1	INTRODUCTION	5
2.2	TRAFFIC CATCHMENT OF THE SOUTHERN RELIEF ROAD	7
3.	TRAFFIC IMPACTS OF THE PROPOSED SCHEME	10
3.1	INTRODUCTION	10
3.2	TRAFFIC FLOW CHANGES	10
3.3	JUNCTION CONGESTION CHANGES	13
3.4	JUNCTIONS THAT GET CONGESTED.	13
3.5	ALREADY OVER	13
3.6	CHANGE IN JUNCTIONS WITHIN OPERATIONAL CAPACITY	13
3.7	SOUTHERN RELIEF ROAD TURNING MOVEMENTS	18
3.8	NETWORK HIGHWAY INDICATORS	20
4.	CONCLUSIONS	22

LIST OF FIGURES

Figure 1.	Indicative alignment of the Market Harborough Southern Relief Road.	6
Figure 2.	2031 SRR Traffic Distribution Morning Peak.	8
Figure 3.	2031 SRR Traffic Distribution Morning Peak.	9
Figure 4.	Traffic Flow Change between 'with' and 'without' scheme scenario in the morning peak.	11
Figure 5.	Traffic Flow Change between 'with' and 'without' scheme scenario in the evening peak.	12
Figure 6.	Junctions that see a change in congestion for the 'with' SRR scenario in the morning peak.	14
Figure 7.	Junctions that see a change in congestion for the 'with' SRR scenario in the evening peak.	15
Figure 8.	V/C change of uncongested junctions in the morning peak.	16
Figure 9.	V/C change of uncongested junctions in the evening peak.	17

LIST OF TABLES

Table 1.	Turning Flows for 2031 'with' scheme - Harborough Road (A508) access.	18
Table 2.	Turning Flows for 2031 'with' scheme - A6 access.	19
Table 3.	Market Harborough AOI Network Statistics.	20

1. INTRODUCTION

1.1 Background

1.1.1 SYSTRA has been commissioned by Leicestershire County Council (LCC) to use the Leicester and Leicestershire Integrated Transport Model (LLITM) to develop an understanding of current and future transport issues in Market Harborough.

1.1.2 Stage 1, Part 1 of the study involved an assessment of the LLITM highway model validation within the identified Area of Interest (AOI) in and around Market Harborough.

1.1.3 Part 2 of the study comprised of the revalidation of the LLITM highway model within the AOI to ensure that the modelled flows reflect the observed flow data. Both count and journey time validation has been undertaken as requested by LCC. LCC have approved the model as being 'fit for purpose'.

1.1.4 Part 3 of the study involved the assessment and evaluation of the 2011 and 2031 future year model to provide an overview of the general highway network conditions in and around Market Harborough.

1.1.5 This Technical Note details the results from Part 4 of the study and summarises the findings from the testing of the Market Harborough Southern Relief Road proposal.

1.2 Structure of the Note

1.2.1 The structure of the note is given below:

- Chapter 2 outlines the details of the proposed Southern Relief Road;
- Chapter 3 outlines the traffic impacts of the scheme;
- Chapter 4 concludes the findings of the report.

2. SCHEME DETAILS

2.1 Introduction

2.1.1 The Southern Relief Road (SRR) has been proposed as a new road link between Northampton Road and A6 in the South of Market Harborough.

2.1.2 Figure 1 illustrates the indicative alignment of the potential Southern Relief Road.

2.1.3 The Market Harborough Southern Relief Road is proposed to connect Northampton Road/Harborough Road with the A6 at the junction of Kettering Road. Passing over Braybrooke Road and the Midland Main Line.

2.1.4 The SRR is modelled within the LLITM model with the national speed limit (60mph). It is based on a 2031 forecast year with two peak hour scenarios tested, that of the morning peak period between the times of 08:00 and 09:00 and the evening peak period between 17:00 and 18:00.

Figure 1. Indicative alignment of the Market Harborough Southern Relief Road.

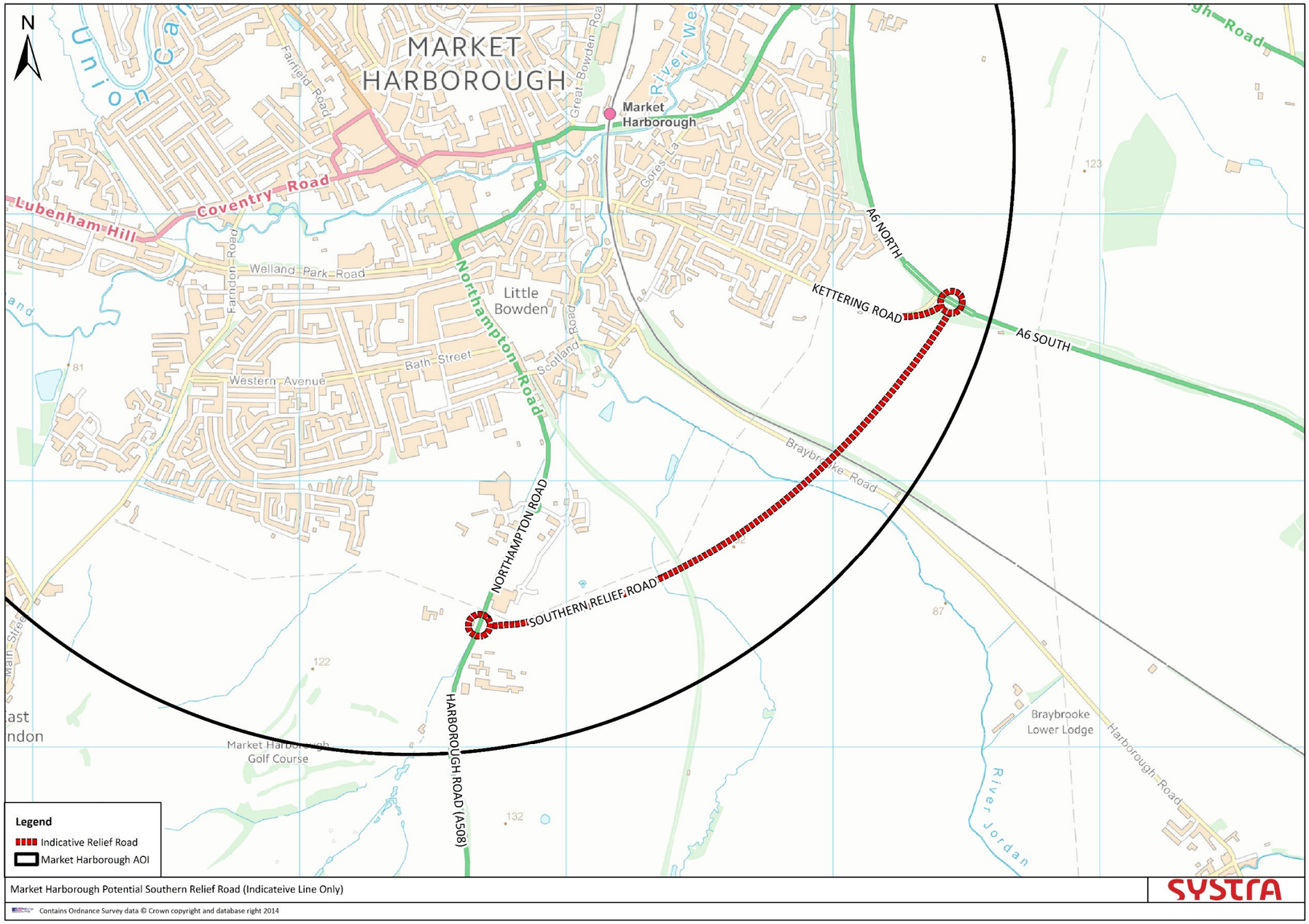

Market Harborough Potential Southern Relief Road (Indicateive Line Only)

SYSTRA

Contains Ordnance Survey data © Crown copyright and database right 2014

2.2 Traffic Catchment of the Southern Relief Road

2.2.1 Figures 2 and 3 shows the traffic catchment of the Southern Relief Road identified through the Select Link Analysis in SATURN.

2.2.2 The Southern Relief Road is forecast to be accessed from a number of existing roads in both the time periods including:.

- A6 (N);
- Sutton Road (B664);
- Harborough Road (A427);
- A6 (S), and;
- Harborough Road (A508).

2.2.3 The modelling results suggest that the majority of the traffic using the SRR is through traffic that has its origin and destination outside Market Harborough; which, in absence of the SRR would have travelled through the town.

2.2.4 Only a limited proportion of vehicles using SRR are forecast to have origins or destinations within Market Harborough.

SYSTRA

Figure 2. 2031 SRR Traffic Distribution Morning Peak.

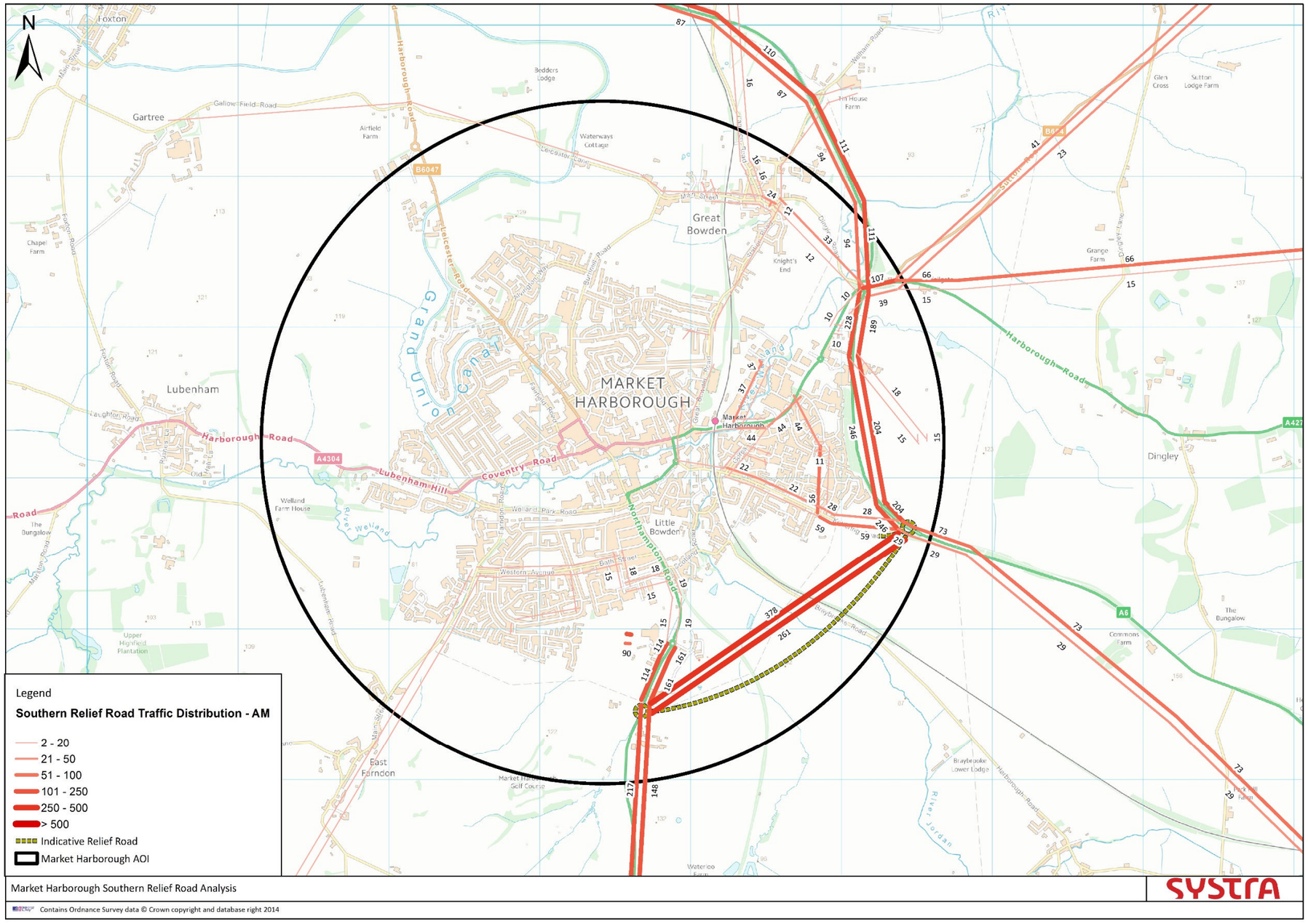

SYSTRA

Figure 3. 2031 SRR Traffic Distribution Morning Peak.

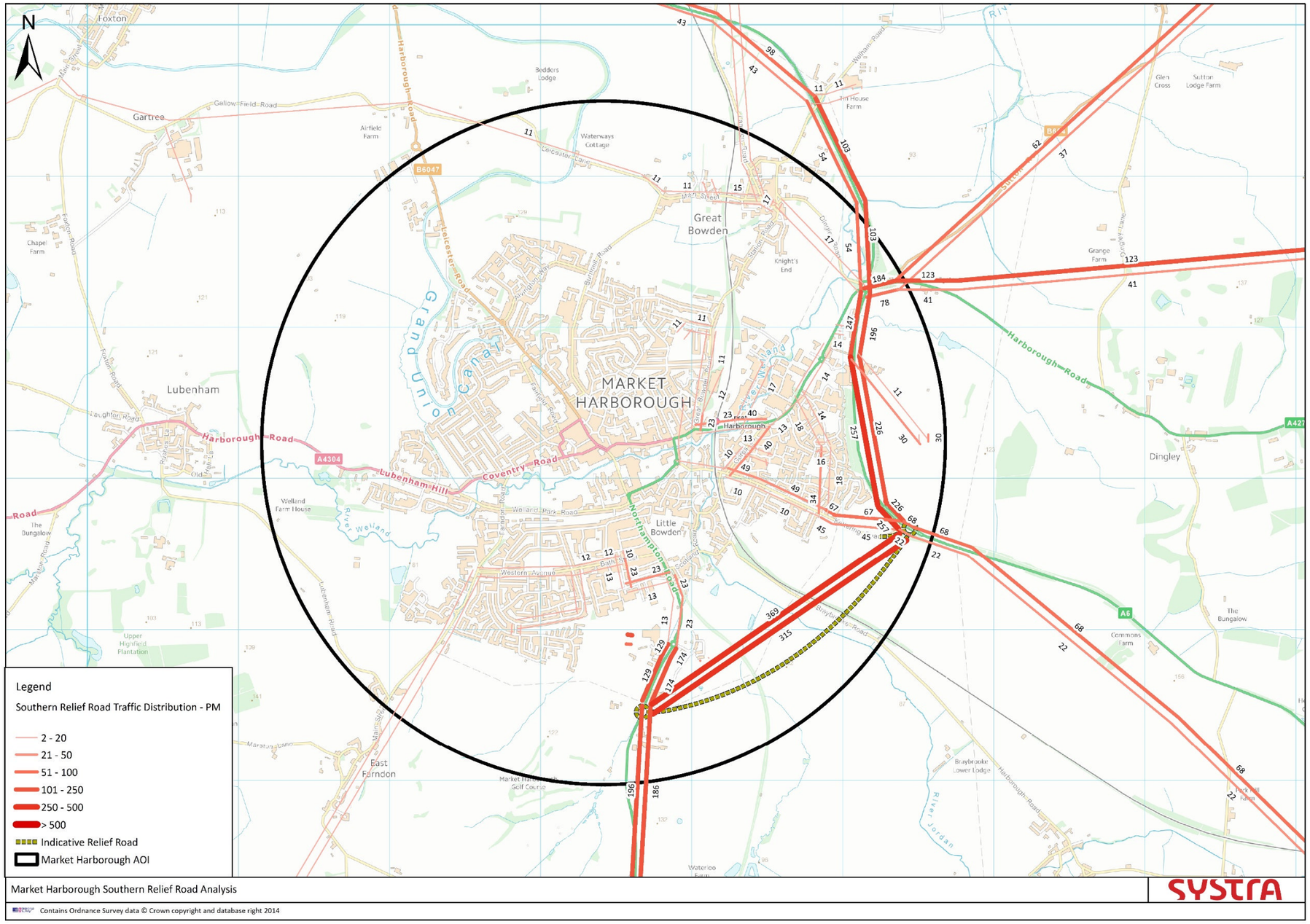

3. TRAFFIC IMPACTS OF THE PROPOSED SCHEME

3.1 Introduction

3.1.1 This section summarises the traffic impacts of the SRR on the highway network.

3.1.2 The traffic conditions with the scheme in place have been compared with a scenario without the scheme to understand the traffic impact of the scheme .

3.2 Traffic Flow Changes

3.2.1 The change in traffic flows between with and without the Southern Relief Road are presented in Figures 4 and 5 for the morning and evening peaks respectively.

3.2.2 The increase in traffic with the SRR is shown in red whilst the reduction in traffic is shown in green.

3.2.3 The following key roads are forecast to witness a net decrease in traffic in both the morning and evening peaks:

- A6 south;
- Braybrooke Road;
- Northampton Road;
- Scotland Road/Gores Lane, and;
- Harborough Road (B6047).

3.2.4 The roads forecast to experience an increase in traffic in both the time periods include:

- Harborough Road (A508);
- The A6 between Kettering Road/A6 and Dingley Road/A6/Harborough Road;
- Sutton Road, and;
- Great Bowden Road.

3.2.5 Additionally in the morning peak period the A6 north is forecast to witness an increase in flow, whilst Harborough Road (A427) is forecast to witness an increase during the evening peak.

3.2.6 The traffic flow changes are mainly due to the traffic diversion and reassignment as a result of the new link road.

3.2.7 As shown within Figures 4 and 5 it is forecast that town centre roads will witness a general decrease in traffic. This is due to some of the traffic diverting to alternative routes to use the SRR rather than using roads within the town, such as Braybrooke Road and the A6 which are both forecast to witness a decrease in traffic in both the time periods.

3.2.8 Further analysis has also identified that an increase in congestion occurs on the A6 as a result of additional traffic resulting in the diversion of existing traffic to local alternative routes, which, as a result limits the SRR's benefits in the evening peak.

Figure 4. Traffic Flow Change between 'with' and 'without' scheme scenario in the morning peak.

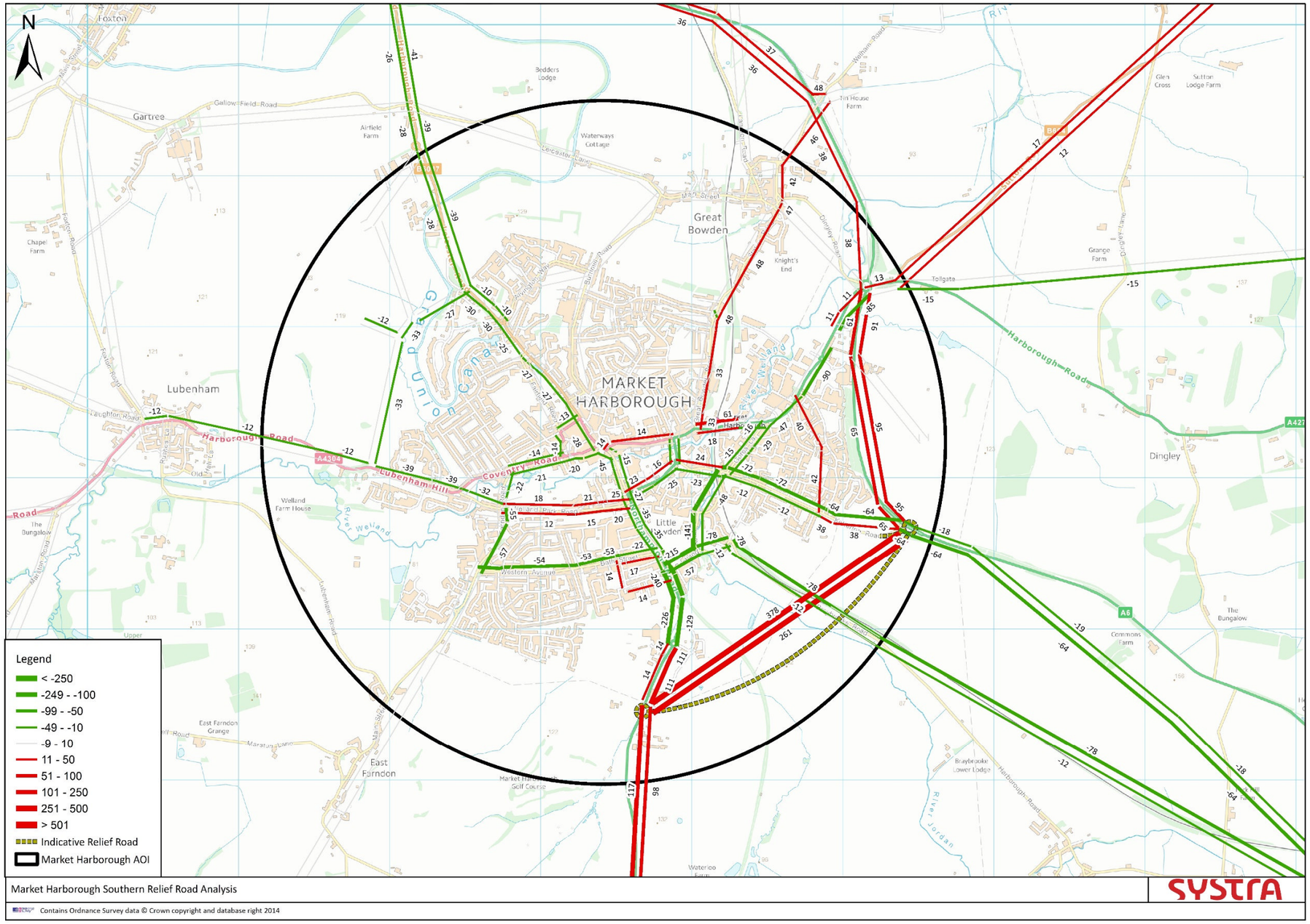

Figure 5. Traffic Flow Change between 'with' and 'without' scheme scenario in the evening peak.

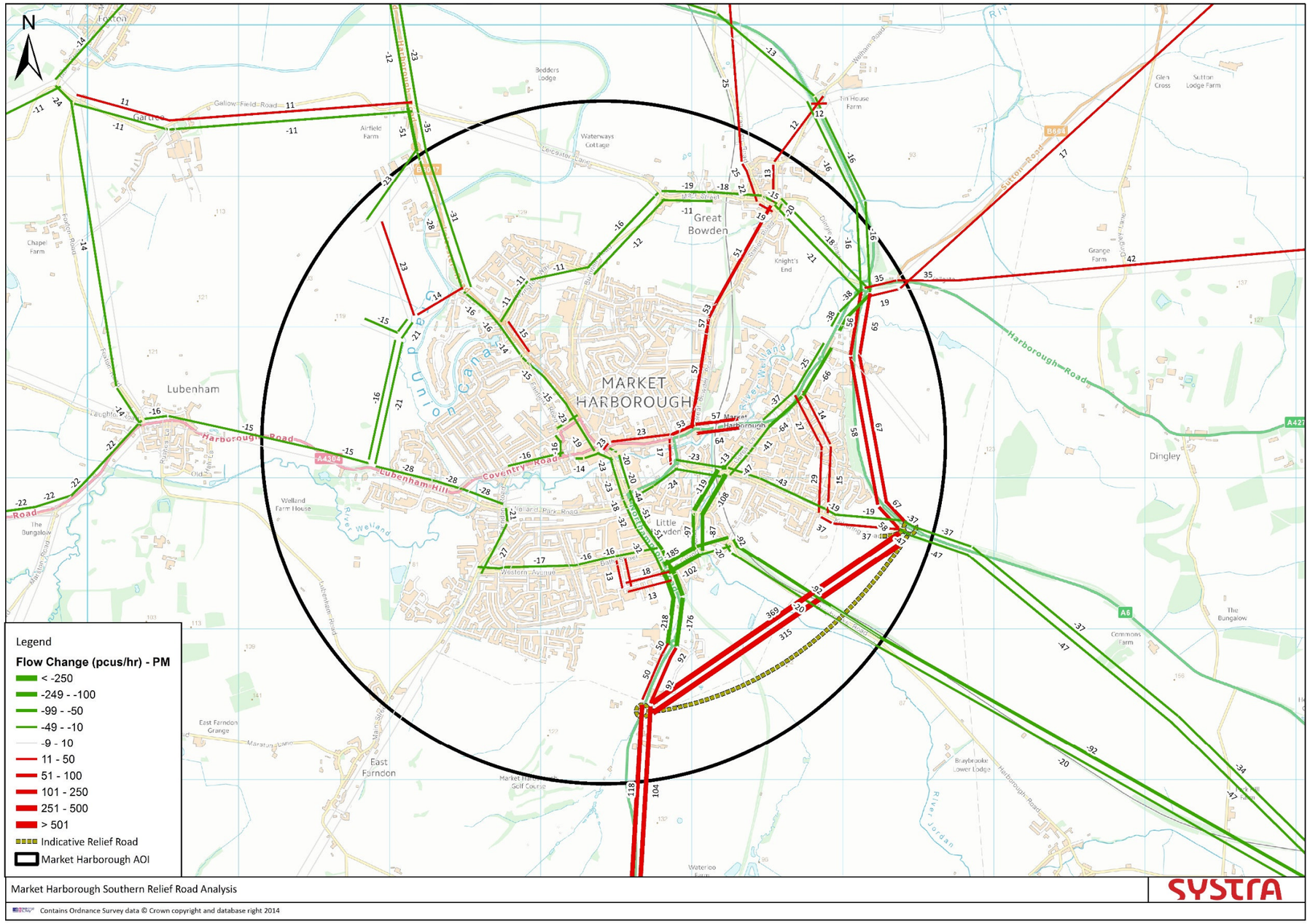

Market Harborough Southern Relief Road Analysis

SYSTRA

Contains Ordnance Survey data © Crown copyright and database right 2014

SYSTRA

3.3 Junction Congestion Changes

3.3.1 Changes in junction congestion between the 'with Southern Relief Road' and 'without' scenarios are presented in Figures 6 and 7. Figures 8 and 9 illustrate the V/C change in uncongested junctions within the AOI.

3.3.2 Junction congestion is measured by determining the ratio of the volume of traffic using a junction, to the capacity of traffic that can be accommodated by the junction. A V/C (Volume/Capacity) ratio of 85% or greater is considered to be the point at which the junction is at operational capacity to the extent that delays and queues are likely to be observed.

3.4 Junctions that get congested.

3.4.1 The junctions that get congested are those that have been identified to be uncongested in the Without Scheme Scenario, but are forecast to be pushed over the 85% capacity threshold in the With Scheme Scenario.

3.4.2 For the SRR scheme morning or evening peak periods, it is identified that none of the junctions are forecast to get congested as a result of the scheme in both the time periods.

3.5 Already Over

3.5.1 These are the junctions that are already congested but witness an increase or decrease in congestion as a result of the scheme.

3.5.2 In Figure 6 and 7, for both the morning and evening peak periods the junctions that are already over but are forecast to witness a reduction in congestion include:

- Sutton Road (B664)/Harborough Road (A427), and;
- Northampton Road/Springfield Street/Northampton Road (A508).

3.5.3 This reduction is as a result of the internal traffic being diverted away from using the town centre routes to using the SRR.

3.5.4 The only junction that is forecast to see an increase in congestion is the Welland Park Road/Northampton Road (A508) junction where a marginal increase in congestion is observed in morning peak.

3.6 Change In Junctions Within Operational Capacity

3.6.1 Figures 8 and 9 show changes in VC ratio for the junctions that are within operational capacity. The junctions that witness an increase in VC ratio are shown in shades of red while those where the VC ratio decreases are shown in the shades of green.

3.6.2 It is observed that whilst the VC ratio increases marginally on some roads, it decreases on the others. This is a result of the traffic redistribution from one route to another.

3.6.3 The changes in VC ratio is marginal across the whole network. None of the junctions show any significant changes in the VC ratio.

SYSTRA

Figure 6. Junctions that are already over but witness a decrease or an increase in congestion within the morning peak with the SRR.

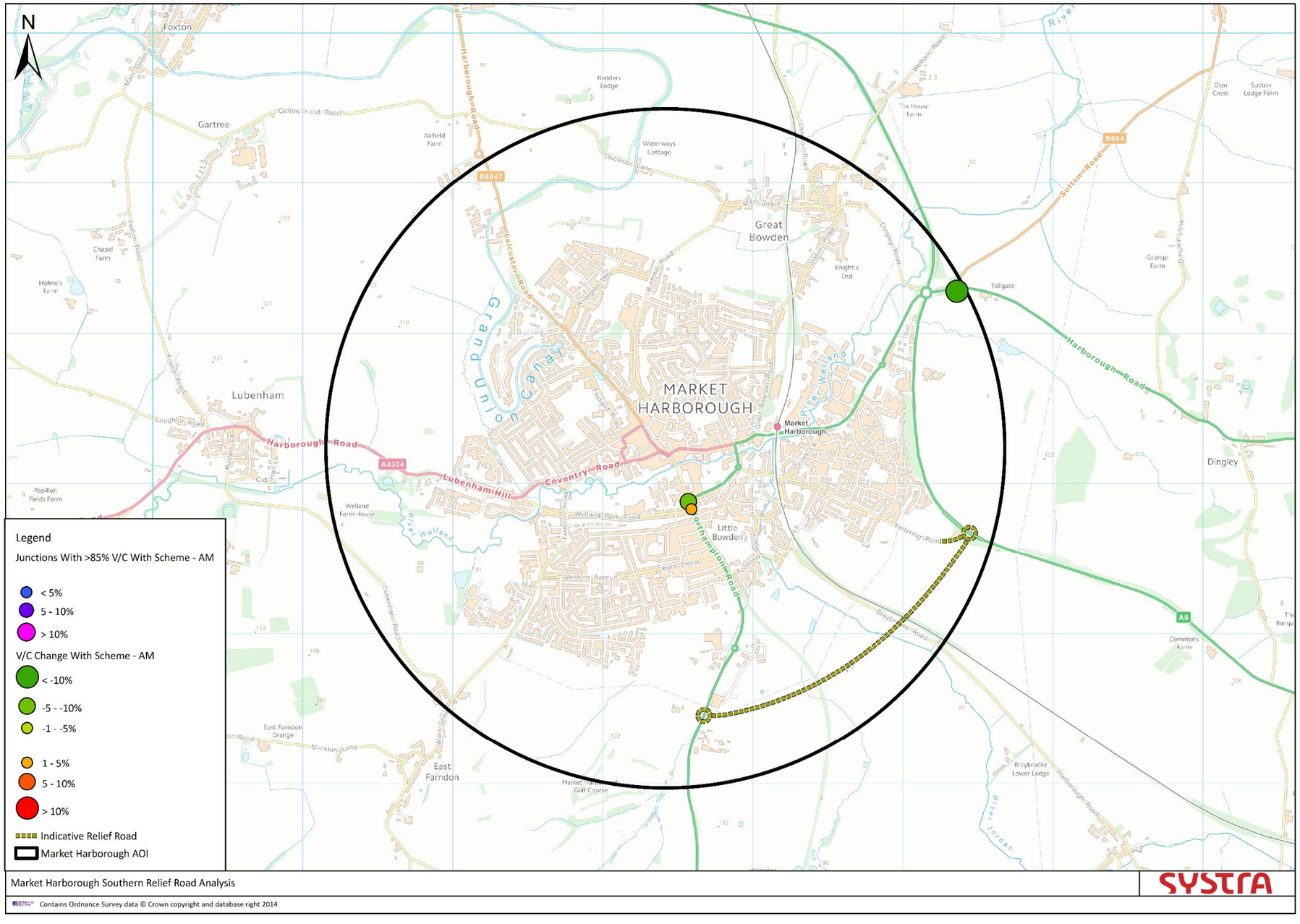

Market Harborough Southern Relief Road Analysis

SYSTRA

Contains Ordnance Survey data © Crown copyright and database right 2014

Figure 7. Junctions that are already over but witness a decrease or an increase in congestion within the evening peak with the SRR.

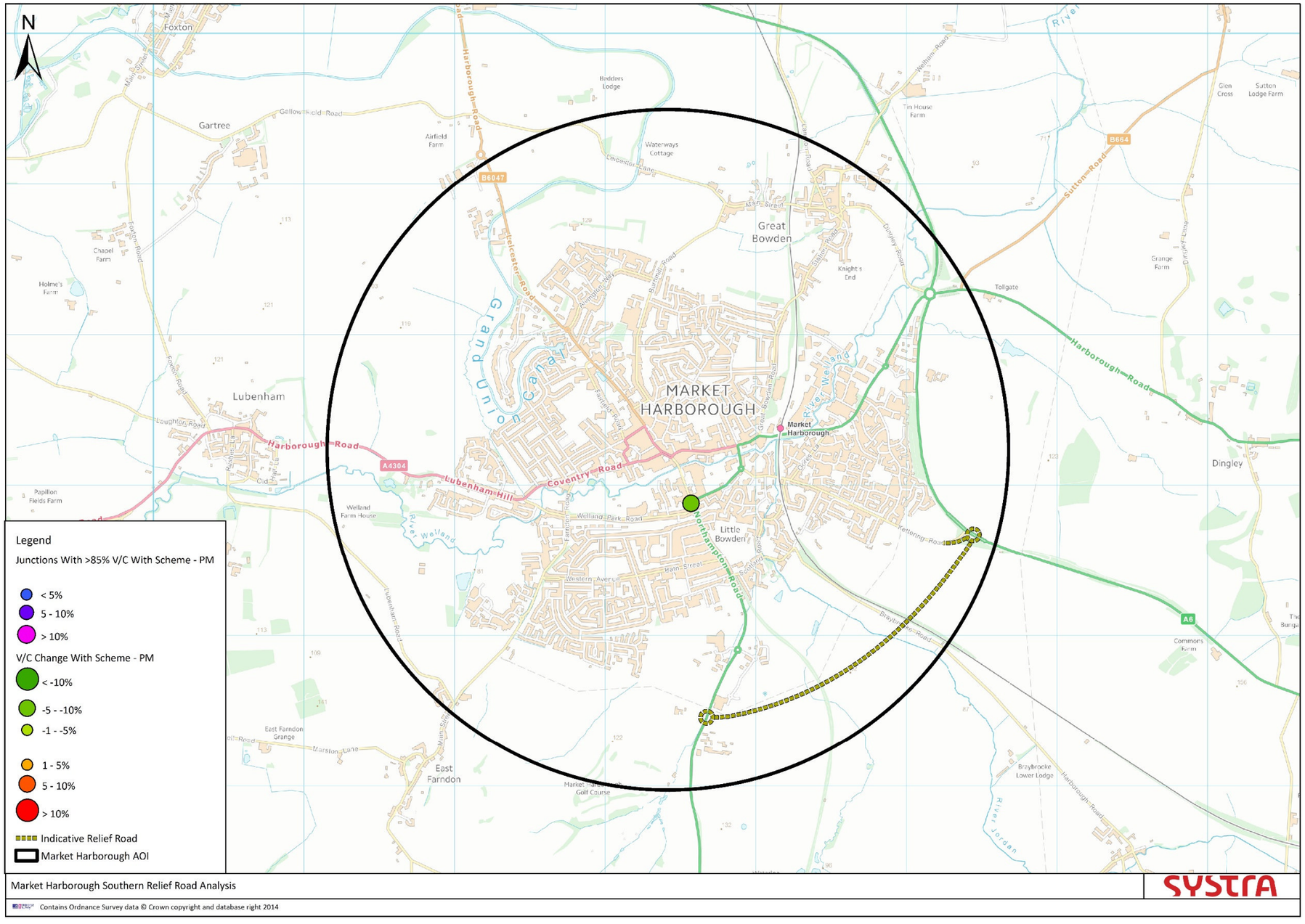

Figure 8. V/C change of uncongested junctions in the morning peak.

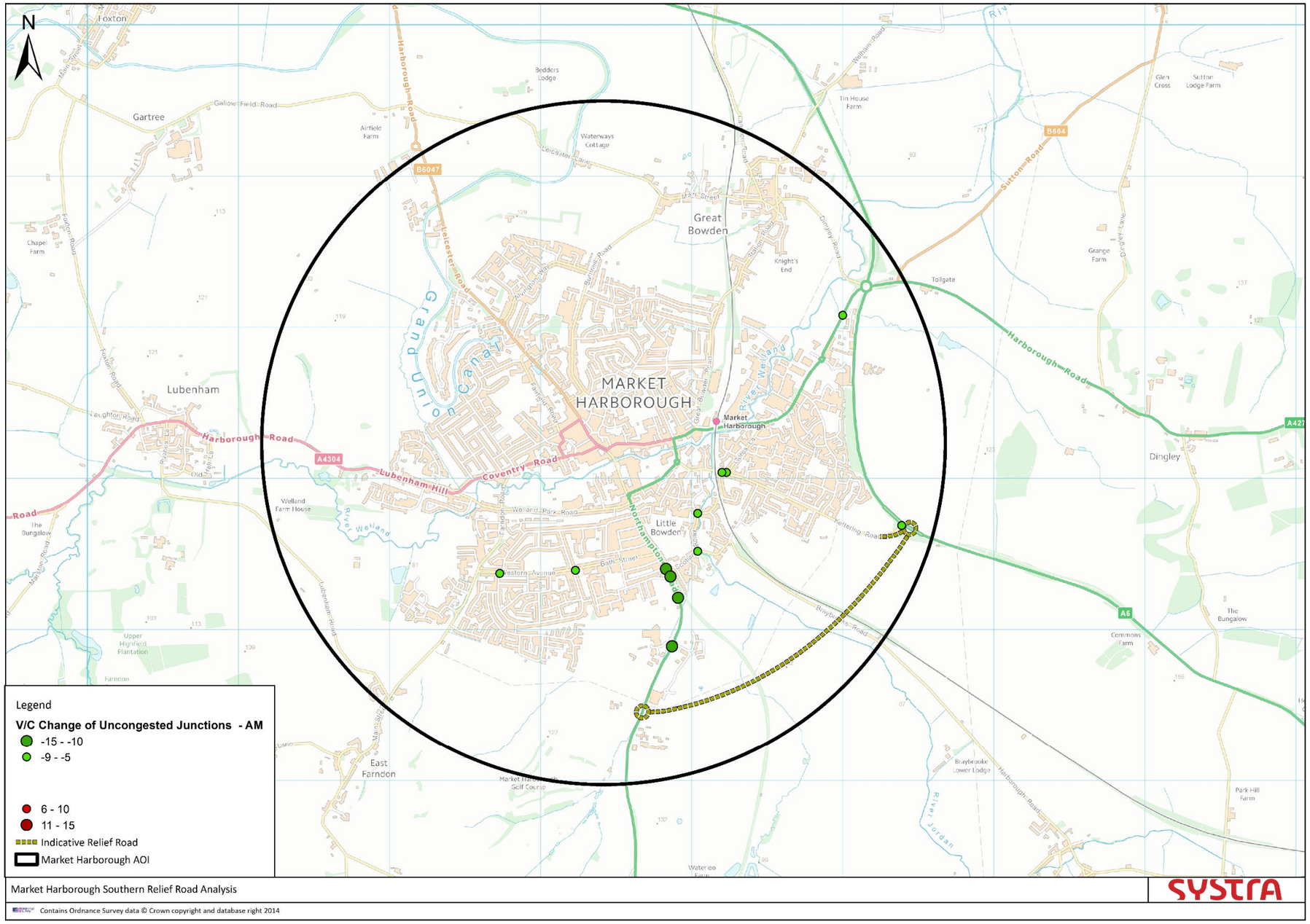

Figure 9. V/C change of uncongested junctions in the evening peak.

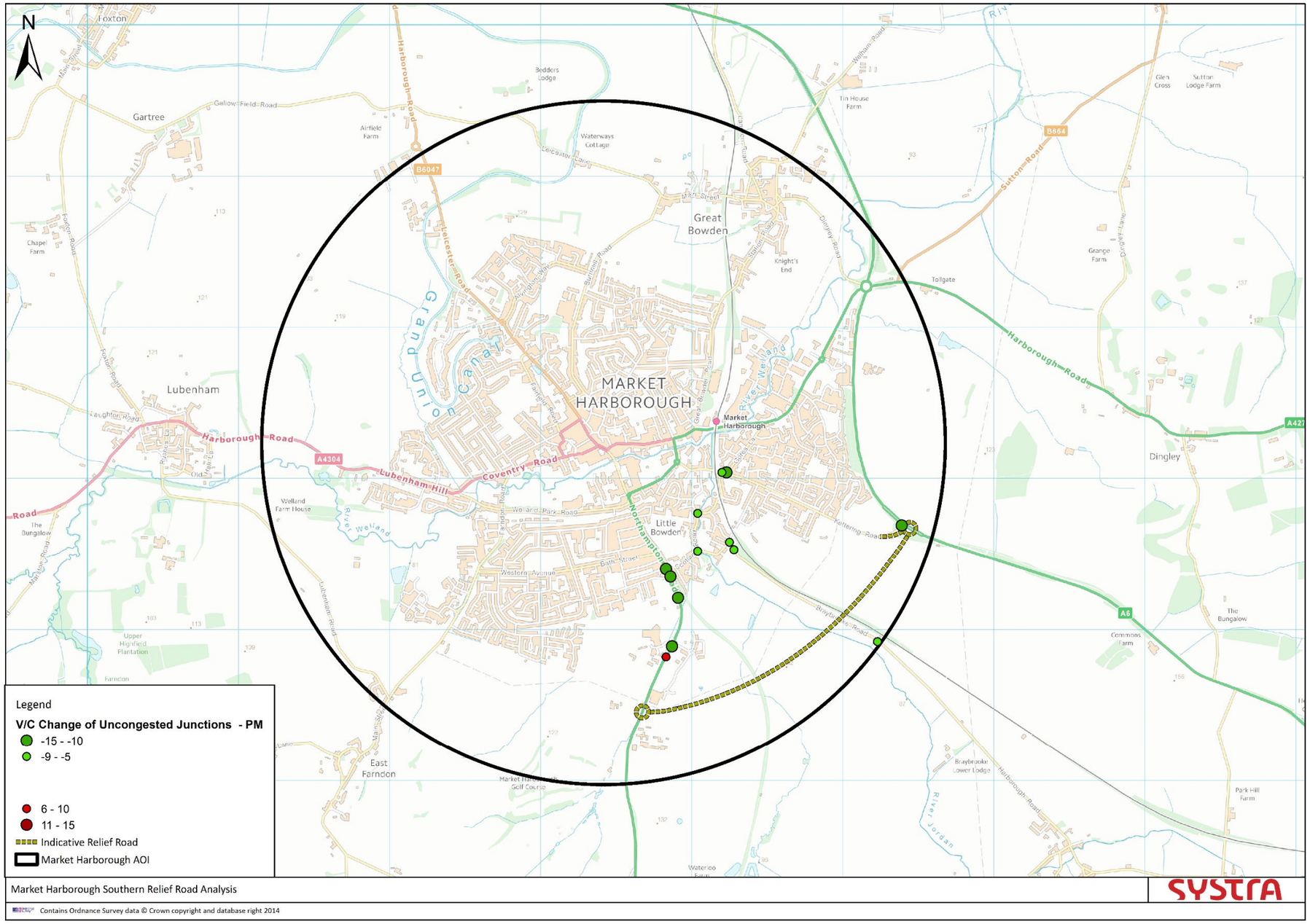

SYSTRA

3.7 Southern Relief Road Turning Movements

3.7.1 The turning flows at the junctions at each end of the Southern Relief Road are presented within Tables 1 and 2.

3.7.2 Table 1 show the turning flows for the morning and evening peak periods at the junction on Harborough Road (A508)/Northampton Road at the west of the proposed relief road. Whilst Table 2 shows the flows at the junction of the A6/Kettering Road at the east of the proposed relief road.

3.7.3 SRR junction plots have been taken from LLITM and are included *Figures – Southern Relief Road Junction Plots.*

Table 1. Turning Flows for 2031 'with' scheme - Harborough Road (A508) access.

	AM				PM			
TURNING MOVEMENT	TOTAL	CAR	LGV	HGV	TOTAL	CAR	LGV	HGV
Northampton Road to SRR	160	158	2	0	174	169	4	0
Northampton Road to Harborough Road (A508)	259	218	25	16	287	248	24	15
SRR to Northampton Road	113	112	2	0	130	129	0	0
SRR to Harborough Road (A508)	147	128	7	12	185	179	5	1
Harborough Road (A508) to Northampton Road	287	246	26	14	267	214	49	4
Harborough Road (A508) to SRR	217	201	11	5	198	190	6	2

SYSTRA

Table 2. Turning Flows for 2031 'with' scheme - A6 access.

	AM				PM			
TURNING MOVEMENT	TOTAL	Car	LGV	HGV	TOTAL	Car	LGV	HGV
A6 North to A6 South	469	398	41	30	369	337	17	15
A6 North to SRR	204	184	8	12	226	220	5	1
A6 North to Kettering Road	8	7	1	0	14	13	0	0
A6 South to SRR	29	28	1	0	23	22	0	0
A6 South to Kettering Road	451	399	36	16	326	292	28	6
A6 to A6 North	398	339	42	17	384	326	44	14
SRR to Kettering Road	58	57	2	0	45	43	2	0
SRR to A6 North	246	231	11	5	259	249	8	2
SRR to A6 South	73	72	1	0	68	67	0	0
Kettering Road to A6 North	70	70	0	0	78	77	1	0
Kettering Road to A6 South	172	128	34	10	311	274	31	6
Kettering Road to SRR	28	27	0	0	66	66	0	0

SYSTRA

3.8 Network Highway Indicators

3.8.1 Highway indicators for the area of influence can provide a way of gauging the overall impact of the new scheme. . A brief explanation of key indicators is provided below.

- **Total Travel Distance** – total distance travelled across the area of influence expressed in PCU kilometres.
- **Total Travel Time** – total travel time across the area of influence expressed in PCU hours
- **Over capacity queues** - Time spent queuing at junctions that are over capacity. As traffic levels increase we expect to see a growing number of junctions reaching capacity and the time spent queuing at these over-capacity junctions increasing.
- **Average speed** - expressed as kilometres per hour for all traffic within the highway model simulation area for each peak period. Increased traffic levels should lead to more delays resulting in lower average speeds.

3.8.2 Table 3 shows the highway statistics in the area of influence for both peaks.

Table 3. Market Harborough AOI Network Statistics.

INDICATOR	AM					PM				
	2011 BASE	2031 DO MINIMUM	2031 WITH SCHEME	DIFF B/T 2031 DO MIN & 2011 BASE	DIFF B/T 2031 WITH & 2031 DO MIN	2011 BASE	2031 DO MINIMUM	2031 WITH SCHEME	DIFF B/T 2031 DO MIN & 2011 BASE	DIFF B/T 2031 WITH & 2031 DO MIN
Total Travel Distance (PCU Kms)	30,062	33,117	35,465	3,055	2,348	29,468	33,354	35,741	3,886	2,387
Total Travel Time (PCU Hrs)	750	908	912	158	4	694	856	890	162	34
Over Capacity Queues (PCU Kms)	12	48	46	36	-2	0	17	26	17	9
Average Speed (Km/Hrs)	40	37	39	-3	2	43	39	40	-4	1

3.8.2 The AOI network statistics suggest that the introduction of the SRR results in an overall increase in total travel distance undertaken. This is due to the increase in the lengths of trips undertaken as a result of the rerouting of traffic onto the SRR. As a consequence, the total travel distance and total travel times are forecast to increase for both the morning and evening peak periods.

3.8.3 The overcapacity queues are expected to decrease marginally in the morning peak but increase slightly in the evening peak. A further investigation has revealed that this is mainly due to the marginal increase in delays in the evening peak at the junctions at both ends of the SRR due to traffic diversion to the SRR and has resulted in overall increase in the overcapacity queues. Further analysis has also identified that an increase in congestion occurs on the A6 as a result of additional traffic resulting in the diversion of existing traffic to local alternative routes.

3.8.4 The average speeds within the AOI improve overall by 7% in the morning peak and 3% in the evening peak hour.

3.8.5 The network performance indicators suggest that overall the SRR improves the network average speeds within the AOI and brings some congestion relief in the morning peak. However the congestion benefits are limited in the evening peak due to some additional delays caused at the junctions at both the ends of the SRR.

3.8.6 This suggests that further investigation into junction improvements may be required as a part of a wider network analysis to ensure that the full benefits of the SRR are realised.

4. CONCLUSIONS

4.1.1 SYSTRA has been commissioned by Leicestershire County Council (LCC) to use the Leicester and Leicestershire Integrated Transport Model (LLITM) to develop an understanding of current and future transport issues in Market Harborough.

4.1.2 Part 4 of the study involves the assessment and evaluation of the 2031 scenario with and without a potential Southern Relief Road (SRR) and is the subject of this technical note.

4.1.3 The traffic flow changes suggest that the introduction of the proposed SRR is likely to reduce traffic within Market Harborough Town Centre, for both the morning and evening peak periods. It is also forecast that it would result in decrease in traffic on some of the key routes into Market Harborough, such as the A6 and Braybrooke Road. Furthermore it is identified that the majority of the traffic using the SRR is through traffic.

4.1.4 The key roads forecast to experience a substantial decrease in traffic include:

- A6 south;
- Braybrooke Road;
- Northampton Road;
- Scotland Road/Gores Lane, and;
- Harborough Road (B6047).

4.1.5 The roads that are likely to witness an increase in traffic include:

- Harborough Road (A508);
- The A6 between Kettering Road/A6 and Dingley Road/A6/Harborough Road;
- Sutton Road, and;
- Great Bowden Road.

4.1.6 The junctions that are already over capacity but witness a decrease in congestion for both the morning and evening peak periods include:

- Sutton Road (B664)/Harborough Road (A427);
- Northampton Road/Springfield Street/Northampton Road (A508), and;

4.1.7 The network performance indicators suggest that overall the SRR improves the network average speeds within the AOI and brings some congestion relief in the morning peak but the congestion benefits are limited in the evening peak due to some additional delays caused at the junctions at both the ends of the SRR.

4.1.8 Further analysis has also identified that an increase in congestion occurs on the A6 as a result of additional traffic resulting in the diversion of existing traffic to local alternative routes, which, as a result limits the SRR's benefits in the evening peak.

4.1.9 This suggests that further investigation into wider network improvements or traffic management may be required as part of a wider network study to mitigate these potential impacts to ensure that full benefits of the Southern Relief Road are realised.

Figures 10 - 11

Harborough Road (A508)/Southern Relief Road Turning Movements

SYSTRA

Morning Peak

Figure 10

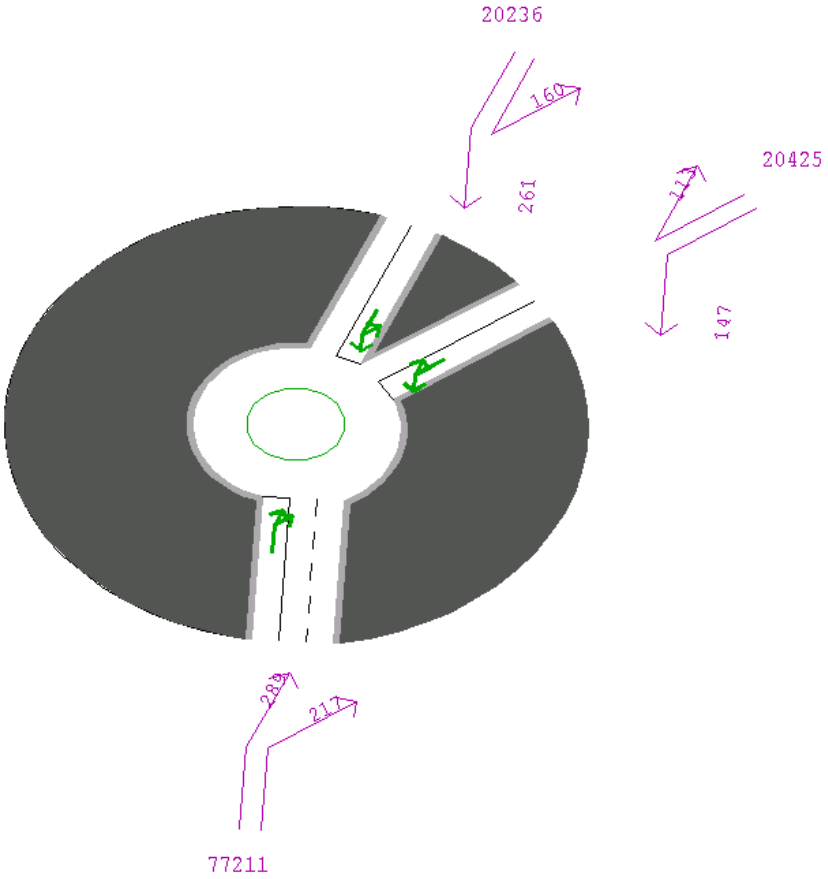

Evening Peak

Figure 11

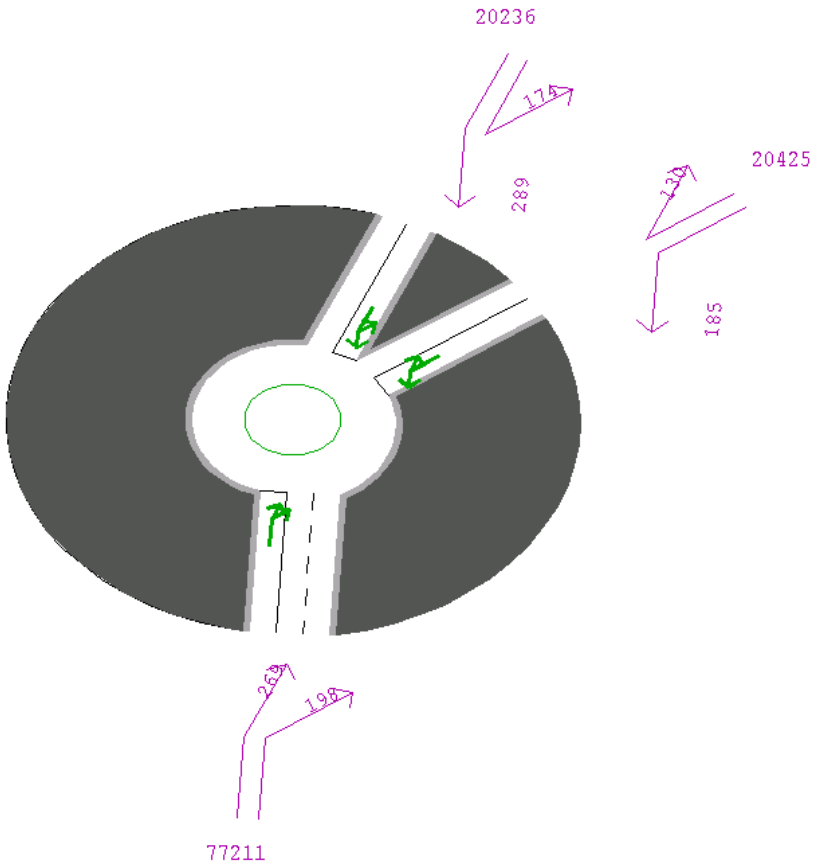

Figures 12 - 13

A6/Southern Relief Road/Kettering Road
Turning Movements

Morning Peak

Figure 12

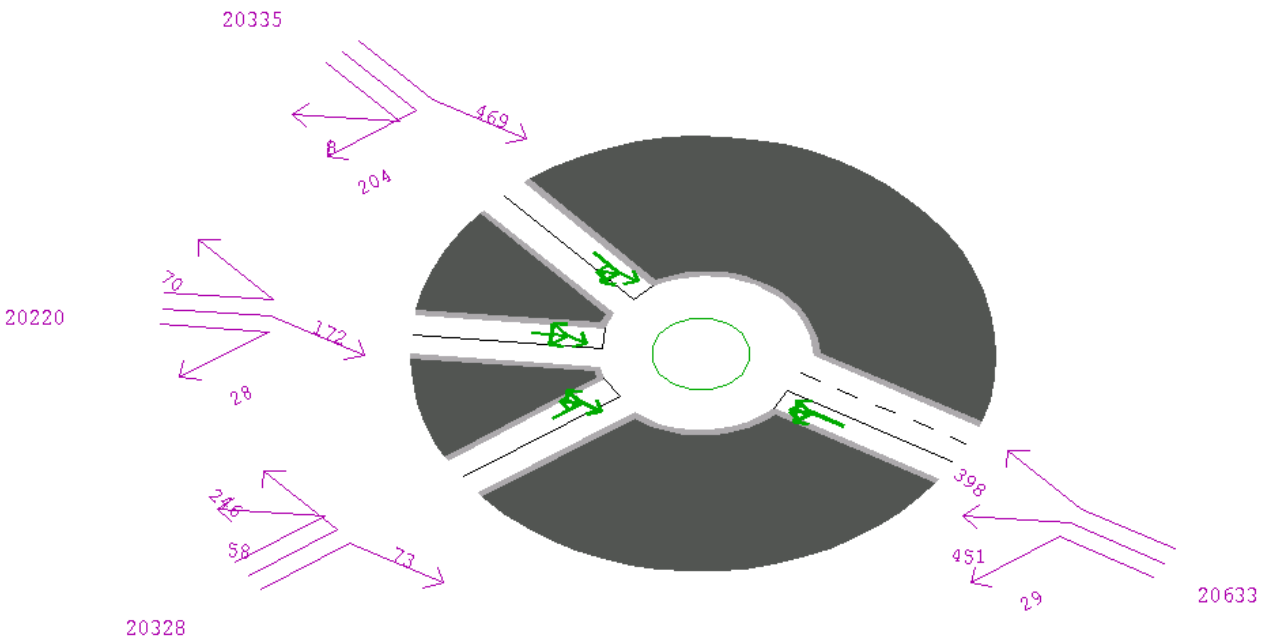

SYSTRA

Evening Peak
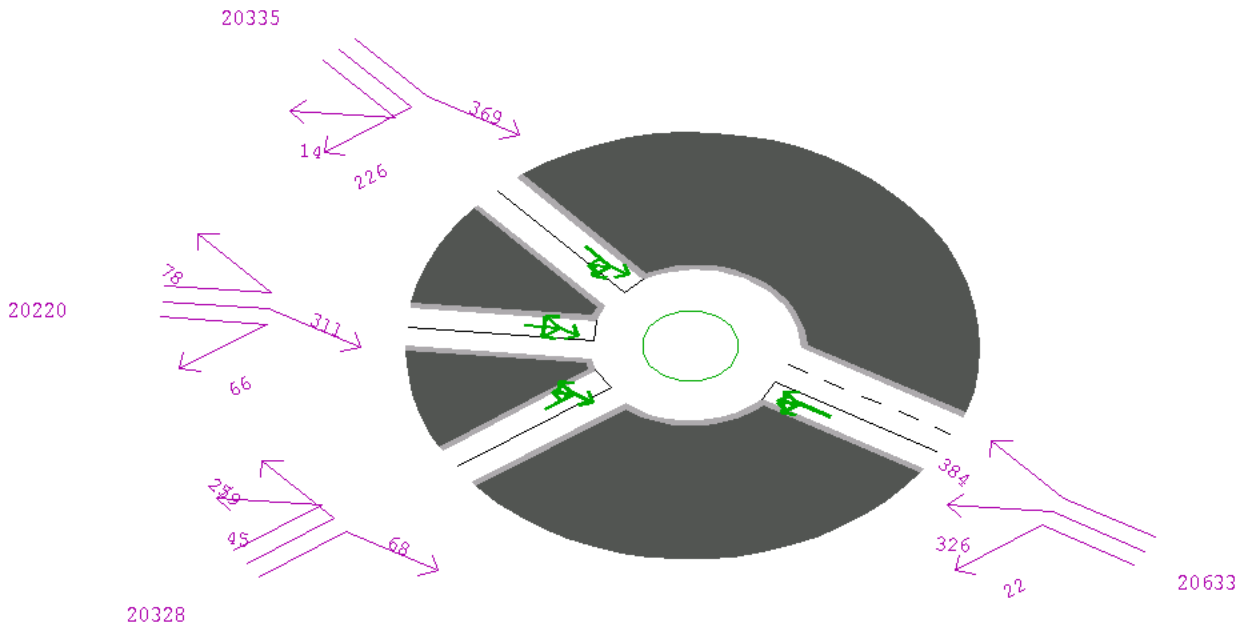
Figure 13